CHAPTER 2: RELIABILITY EVALUATION OF SIMPLE SYSTEMS

In this topic we consider how to estimate the reliability of a system. By a system, we mean assemblages of, say, n identifiable components that perform some function.

Techniques of reliability evaluation of a system depend upon the configuration of its components. In practice, several types of configurations are used. But we shall discuss the reliability evaluation techniques only for the following configurations of components of a system:

- Series configuration
- Parallel configuration
- Mixed configuration
- k-out-of-n configuration
- Standby configuration
- Complex configuration

2.1 RELIABILITY OF A SERIES SYSTEM

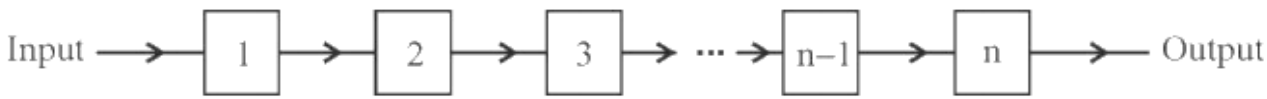

Fig. 14.6: Series system.

Note that Fig. 14.6 simply shows the logical connectivity of the system. Actual physical connectivity of the components in the system may vary. But always remember the following two characteristics of the series system .

(1) For the successful operation of the series system, it is necessary that all n components of the system perform their intended function successfully, and

(2) Only one component needs to fail for system failure.

Let us now obtain an expression for the reliability of the series system.

Let E_i be the event that component i performs its intended function successfully, where i = 1, 2, 3,…, n.

Let R_i denote the reliability of the component i, where i = 1, 2, 3, …, n for a mission of t units of time.

If R denotes the reliability of the series system, then, from the definitions of reliability and series system, we have

$$R = P(E_1 \cap E_2 \cap E_3 \cap \ldots \cap E_n) \qquad \ldots (1)$$

or $R = \prod_{i=1}^{n} R_i$, for a mission of t units of time, … (4a)

where $R_i = P(E_i)$ … (4b)

that is, the reliability of the series system is equal to the product of the individual reliabilities of the components of the system.

In particular, if a system has two components, then

$R = R_1 R_2$ for a mission of t units of time … (5a)

and if the system has three components, then

$R = R_1 R_2 R_3$ for a mission of t units of time … (5b)

Let us consider some examples for evaluating the reliability of a series system.

Example 1: Evaluate the reliability of the series system having the reliability block diagram shown in Fig. 14.7 for a mission of 500 hours, where the given reliabilities of the components are for a mission of 500 hours. Assume that the failure of any component does not affect the functioning of the other components.

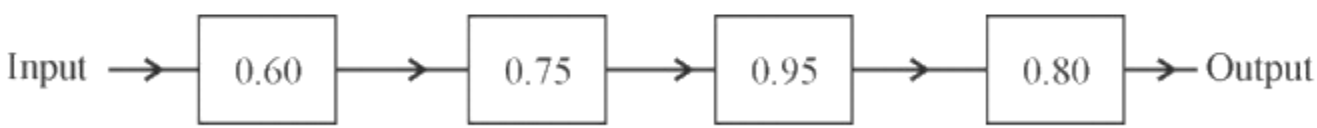

Fig. 14.7: Reliability block diagram for Example 1.

Solution: We know that the reliability of a series system is equal to the product of the individual reliabilities of the components. Therefore, the required reliability of the series system is given from equation (4a) as

$$R = 0.60 \times 0.75 \times 0.95 \times 0.80 \qquad \text{for a mission of 500 hours}$$

$$= 0.342 \qquad \text{for a mission of 500 hours}$$

Example 2: A system has three components connected in series having reliabilities 0.40, 0.70, 0.80, respectively, for a mission of 400 hours. What is the percentage increase in the reliability of the system in each of the following cases?

(i) Reliability of the first component is increased by 0.1 and that of the second and third components remains the same.

(ii) Reliability of the second component is increased by 0.1 and that of the first and third components remains the same.

(iii) Reliability of the third component is increased by 0.1 and that of the first and second components remains the same.

Solution: First of all, we calculate the reliability of the system as per the given reliabilities of the components. From equation (4a or 5b),

$$R = 0.4 \times 0.7 \times 0.8 \qquad \text{for a mission of 400 hours}$$

$$= 0.224 \qquad \text{for a mission of 400 hours}$$

Table 14.1: Computation of System Reliability and Percentage Increase in the Reliability of the System for cases (i), (ii) and (iii) of Example 2

	Reliability of the First Component	Reliability of the Second Component	Reliability of the Third Component	Reliability of the System	Percentage Increase in the Reliability of the System
(1)	(2)	(3)	(4)	(5)	(6)
	0.4	0.7	0.8	0.224	–
i)	0.5	0.7	0.8	0.280	$\frac{0.280-0.224}{0.224}\times 100 = 25\%$
ii)	0.4	0.8	0.8	0.256	$\frac{0.256-0.224}{0.224}\times 100 \square 14.29\%$
iii)	0.4	0.7	0.9	0.252	$\frac{0.252-0.224}{0.224}\times 100 = 12.5\%$

Example 3: Consider a component having reliability 0.95 for a mission of 100 hours. Evaluate the reliability of a series system in the cases having 2, 3, 4,…,10 identical components having reliability 0.95 for the same mission of 100 hours.

Solution: If the single component of a system has reliability 0.95 for a mission of 100 hours, then the system will also have the same reliability for a mission of 100 hours. But the reliability of the series system for a mission of 100 hours will vary if it has 2, 3, 4, …,10 such identical components connected in series

from a reliability point of view. In fact, the reliability of the system decreases with an increase in the number of its components. The calculations are shown in Table 14.2.

Table 14.2: Calculation of Reliability as the Number of Components varies from 1 to 10

Number of Components	Reliability of Series System	% Decrease in the Reliability of the System Compared to the System having Single Component
1	0.95	–
2	$(0.95)^2 = 0.9025$	$\frac{0.95-0.9025}{0.95}\times 100 = 5\%$
3	$(0.95)^3 = 0.857375$	$\frac{0.95-0.857375}{0.95}\times 100 = 9.75\%$
4	$(0.95)^4 \approx 0.814506$	$\frac{0.95-0.814506}{0.95}\times 100 \approx 14.26\%$
5	$(0.95)^5 \approx 0.773781$	$\frac{0.95-0.773781}{0.95}\times 100 \approx 18.55\%$
6	$(0.95)^6 \approx 0.735092$	$\frac{0.95-0.735092}{0.95}\times 100 \approx 22.62\%$
7	$(0.95)^7 \approx 0.698337$	$\frac{0.95-0.698337}{0.95}\times 100 \approx 26.49\%$
8	$(0.95)^8 \approx 0.663420$	$\frac{0.95-0.663420}{0.95}\times 100 \approx 30.17\%$
9	$(0.95)^9 \approx 0.630249$	$\frac{0.95-0.630249}{0.95}\times 100 \approx 33.66\%$
10	$(0.95)^{10} \approx 0.598737$	$\frac{0.95-0.598737}{0.95}\times 100 \approx 36.98\%$

Note: the unreliability (Q) of a system. It is simply given by

$$Q = 1 - R \quad \ldots\ldots\ldots\ldots\ldots\ldots\ldots\ldots\ldots\ldots\ldots\ldots \quad (6)$$

Work to do:

E1) Three components of a system are connected in series configuration from a reliability point of view. The reliabilities of these components for a mission of 200 days are 0.80, 0.95 and 0.96, respectively. Evaluate the reliability of the system for a mission of 200 days. Assume that the components are independent.

E2) Evaluate the unreliability of the system given in E1.

E3) The design of a system is such that it requires 100 identical components in series. Further it is desired that the reliability of the system must be 0.95 for a mission of 800 hours. Determine the minimum reliability of each component.

2.2 RELIABILITY OF A PARALLEL SYSTEM

- We have learnt that the reliability of the series system is worse than the reliability of its poorest component. It means that we cannot improve the reliability of a series system with less reliable components. But this can be done in the case of parallel system.
- A parallel system is nothing but a system all of whose components are in parallel configuration

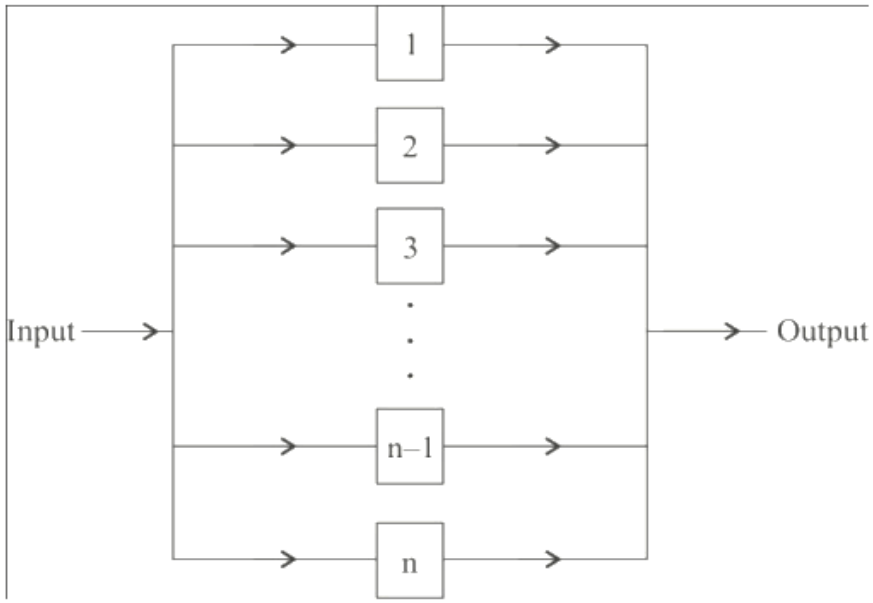

Fig. 14.8: Parallel system.

(1) Only one component needs to work successfully for the successful operation of the system, and

(2) All the components of the system must fail for system failure.

Let us now obtain an expression for the reliability evaluation of the parallel system.

Let E_i be the event that component i performs its intended function successfully, where i = 1, 2, 3, … , n. Let $\overline{E}_i$ (i = 1, 2, 3, …, n) denote the event complementary to the event E_i.

Let R_i denote the reliability of the component i, where i = 1, 2, 3, …, n for a mission of t units of time.

Since $R_i = P(E_i)$, therefore

$$R = 1-(1-R_1)(1-R_2)(1-R_3)...(1-R_n) \qquad ...(8b)$$

$$\text{or } R = 1-\prod_{i=1}^{n}(1-R_i) \qquad \text{for a mission of t units of time} \qquad \ldots (8c)$$

Thus, the reliability of the parallel system is equal to one minus the product of unreliabilities of the elementary components of the system.

In particular, if the parallel system has only two components, then

$$R = 1-(1-R_1)(1-R_2) \qquad \text{for a mission of t units of time} \qquad \ldots (9)$$

and if the parallel system has three components, then

$$R = 1-(1-R_1)(1-R_2)(1-R_3) \qquad \text{for a mission of t units of time} \qquad \ldots (10)$$

Example 4: Evaluate the reliability of the parallel system, which has the reliability block diagram shown in Fig. 14.9 for a mission of 90 days. The reliabilities of the components given in Fig. 14.9 are for a mission of 90 days. Assume that the failure of any component does not affect the functioning of the other components.

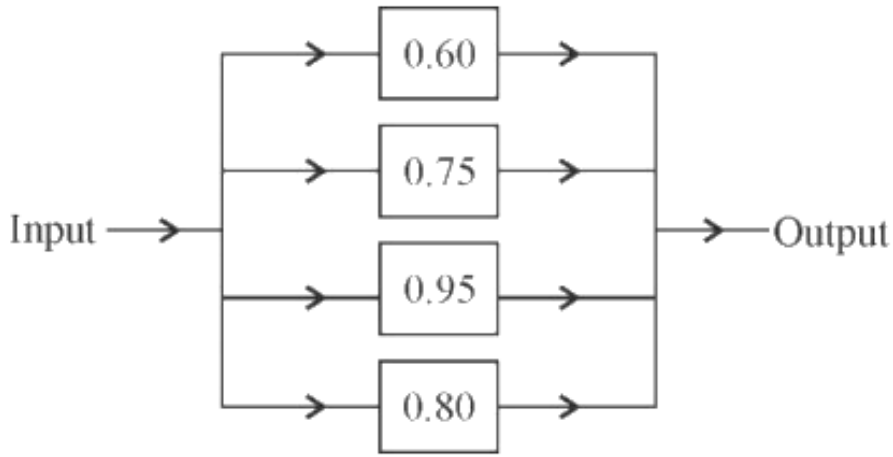

Fig. 14.9: Reliability block diagram for Example 4.

From equation (8b), we know that the reliability of a parallel system (R) having n components with reliabilities R_i, $i = 1, 2, 3, \ldots, n$, is given by

$$R = 1 - (1 - R_1)(1 - R_2)(1 - R_3)\ldots(1 - R_n)$$

In this case, $R_1 = 0.60, R_2 = 0.75, R_3 = 0.95$ and $R_4 = 0.80$.

$$\therefore R = 1 - (1 - 0.60)(1 - 0.75)(1 - 0.95)(1 - 0.80)$$

$$= 1 - 0.40 \times 0.25 \times 0.05 \times 0.20 = 1 - 0.001$$

$$= 0.999 \qquad \text{for a mission of 90 days}$$

Example 5: A system has three components connected in parallel from a reliability point of view having reliabilities 0.20, 0.40, 0.50, respectively, for a mission of 400 hours. What is the percentage increase in the reliability of the system in each of the following cases?

(i) Reliability of the first component is increased by 0.1 and that of the second and third components remains the same.

(ii) Reliability of the second component is increased by 0.1 and that of the first and third components remains the same.

(iii) Reliability of the third component is increased by 0.1 and that of the first and second components remains the same.

Solution: We first calculate the reliability of the system as per the given reliabilities of the components using equation (8b):

$$R = 1-(1-R_1)(1-R_2)(1-R_3), \quad \text{where } R_1 = 0.2, R_2 = 0.4, R_3 = 0.5$$

$$= 1-(1-0.20)(1-0.4)(1-0.5) = 1-0.8\times 0.6\times 0.5 = 1-0.240$$

$$= 0.760 \qquad \text{for a mission of 400 hours}$$

Table 14.3: Computation of System Reliability and Percentage Increase in the Reliability of the System for the Cases (i) , (ii) and (iii)

	Reliability of the I Component	Reliability of the II Component	Reliability of the III Component	Reliability of the System	Percentage Increase in the Reliability of the System
(1)	(2)	(3)	(4)	(5)	(6)
	0.2	0.4	0.5	0.760	–
i)	0.3	0.4	0.5	0.790	$\frac{0.790-0.760}{0.760}\times 100 \square 3.95\%$
ii)	0.2	0.5	0.5	0.800	$\frac{0.800-0.760}{0.760}\times 100 \square 5.26\%$
iii)	0.2	0.4	0.6	0.808	$\frac{0.808-0.760}{0.760}\times 100 \square 6.32\%$

Example 6: Consider a component having reliability 0.75 for a mission of 100 hours. Evaluate the reliability of a parallel system when the system has 2, 3, 4, …, 10 identical components for the same mission of 100 hours.

Solution: If a system has a single component of reliability 0.75 for a mission of 100 hours, it will also have the same reliability for a mission of 100 hours. But the reliability of the parallel system for a mission of 100 hours will vary in the cases having 2, 3, 4 ,…,10 identical components connected in parallel from reliability point of view. In fact, it increases with the number of components as the calculations given in Table. 14.4 below show.

Table 14.4: Calculation of Reliability as Number of Components varies from 1 to 10

Number of Components	Reliability of Parallel System	% Increase in the Reliability of the System Compared to the System having Single Component
1	0.75	–
2	$1-(1-0.75)^2 = 0.9375$	$\frac{0.9375-0.75}{0.75}\times 100 = 25\%$
3	$1-(1-0.75)^3 = 0.984375$	$\frac{0.984375-0.75}{0.75}\times 100 = 31.25\%$
4	$1-(1-0.75)^4 \approx 0.996094$	$\frac{0.996094-0.75}{0.75}\times 100 \approx 32.81\%$
5	$1-(1-0.75)^5 \approx 0.999023$	$\frac{0.999023-0.75}{0.75}\times 100 \approx 33.20\%$
6	$1-(1-0.75)^6 \approx 0.999756$	$\frac{0.999756-0.75}{0.75}\times 100 \approx 33.30\%$
7	$1-(1-0.75)^7 \approx 0.999939$	$\frac{0.999939-0.75}{0.75}\times 100 \approx 33.33\%$
8	$1-(1-0.75)^8 \approx 0.999985$	$\frac{0.999985-0.75}{0.75}\times 100 \approx 33.33\%$
9	$1-(1-0.75)^9 \approx 0.999996$	$\frac{0.999996-0.75}{0.75}\times 100 \approx 33.33\%$
10	$1-(1-0.75)^{10} \approx 0.999999$	$\frac{0.999999-0.75}{0.75}\times 100 \approx 33.33\%$

Example 7: Suppose you are an industrial statistician in a company. Suppose a system engineer visits you and explains his/her problem to you as follows:

'I want to design a parallel system with an overall reliability of 0.98 by using identical components, each having individual reliability of 0.25. What is the minimum number of components that I should connect?'

What will your answer be?

Solution: Let R_s be the overall reliability of the system and R, the reliability of each component. If the required number of components is n, then from equation (8b), we have

$$R_s = 1-(1-R)^n$$

$$\Rightarrow 0.98 = 1-(1-0.25)^n \Rightarrow (1-0.25)^n = 1-0.98 \Rightarrow (0.75)^n = 0.02$$

Taking natural logarithm on both sides, we get

$$n \ln(0.75) = \ln(0.02) \qquad \left[\because \ln(m^n) = n(\ln m)\right]$$

$$\Rightarrow -0.2877n \square -3.9120 \qquad \text{[Using scientific calculator]}$$

$$\Rightarrow n \square \frac{3.9120}{0.2877} \square 13.5975$$

Since the number of components cannot be in fraction, he/she should connect 14 components in parallel to achieve a reliability of 0.98.

Work to do:

E4) A system has three components, which are connected in parallel configuration from a reliability point of view. The reliabilities of these components for a mission of 300 days are 0.60, 0.55 and 0.70, respectively. Evaluate the reliability of the system for a mission of 300 days. Assume that the components are independent.

E5) Evaluate the unreliability of the system given in E4.

E6) Suppose you are an industrial statistician in a company. Suppose a system engineer visits you and explains his/her simple problem to you as follows:

'I want to design a parallel system with an overall reliability of the system as 0.95 for a mission of 900 hours. The system will have 10 identical components. How poor can a component in the system be'?

Assuming that the components are independent, what will your answer be?

2.3 RELIABILITY OF A MIXED SYSTEM

- A system is said to be a mixed system if the components of the system are connected both in series and in parallel configurations.

- To evaluate the reliability of a mixed system, we first break the reliability block diagram into series or parallel subsystems. Then we evaluate the reliability of each subsystem.

Example 8: Evaluate the reliability of the system for which the reliability block diagram is shown in Fig. 14.10, for a mission of 100 hours. Assume that all components are independent and the reliability of each component is given for a mission of 100 hours as follows:

$R_1 = 0.80$, $R_2 = 0.75$, $R_3 = 0.50$, $R_4 = 0.65$, $R_5 = 0.76$, $R_6 = 0.60$, $R_7 = 0.95$, $R_8 = 0.90$,

where R_i denotes the reliability of the component i, (i = 1, 2, 3, …,8).

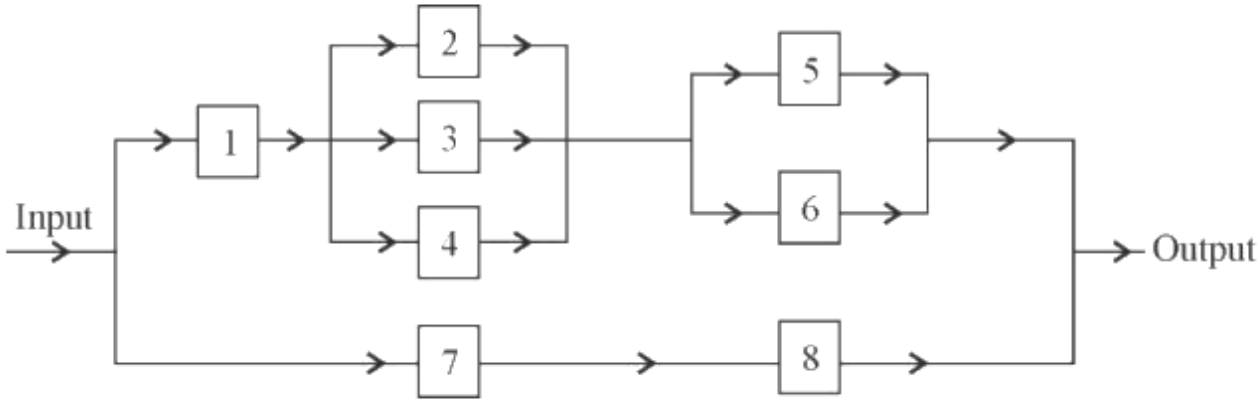

Fig. 14.10: Reliability block diagram for Example 8.

The step by step reduction process is shown in Fig. 14.11.

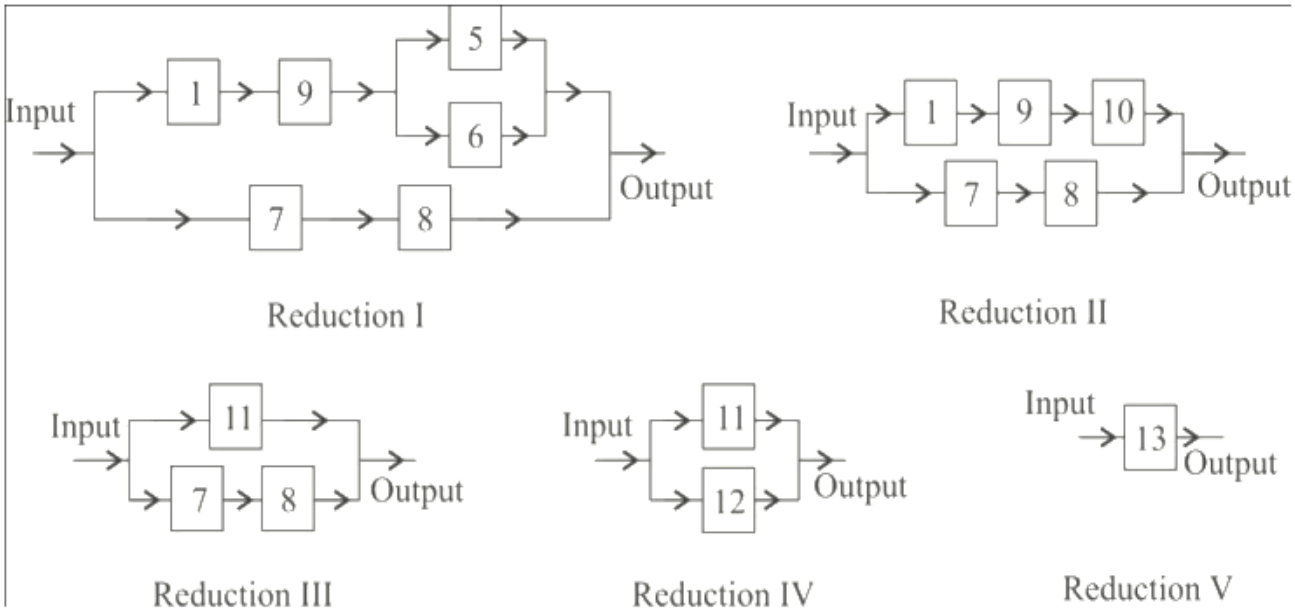

Fig. 14.11: Reductions I to V of Fig. 14.10.

We are given that $R_1 = 0.80$, $R_2 = 0.75$, $R_3 = 0.50$, $R_4 = 0.65$, $R_5 = 0.76$, $R_6 = 0.60$, $R_7 = 0.95$, $R_8 = 0.90$ where R_i denotes the reliability of the given component i, (i = 1, 2, 3,…, 8). Similarly, if R_9 to R_{13} denote the reliabilities of the equivalent components 9 to 13, then using equations (8b and 4a), we have

$$R_9 = 1-(1-R_2)(1-R_3)(1-R_4) \qquad \left[\because \text{ components } 2,3,4 \text{ are in parallel configuration}\right]$$

$$= 1-(1-0.75)(1-0.50)(1-0.65)$$

$$= 1-0.25\times 0.50\times 0.35 \;\square\; 1-0.0438 = 0.9562$$

$$R_{10} = 1-(1-R_5)(1-R_6) \qquad \left[\because \text{ components } 5,6 \text{ are in parallel configuration}\right]$$

$$= 1-(1-0.76)(1-0.60)$$

$$= 1-0.24\times 0.40 = 1-0.096 = 0.904$$

$$R_{11} = R_1 R_9 R_{10} \qquad \left[\because \text{ components } 1,9,10 \text{ are in series configuration}\right]$$

$$\square\ 0.80\times 0.9562\times 0.904\ \square\ 0.6915$$

$$R_{12} = R_7 R_8 \qquad \left[\because \text{ components } 7,8 \text{ are in series configuration}\right]$$

$$= 0.95\times 0.90 = 0.855$$

$$R_{13} = 1-(1-R_{11})(1-R_{12}) \qquad \left[\because \text{ components } 11,12 \text{ are in parallel configuration}\right]$$

$$\square\ 1-(1-0.6915)(1-0.855) = 1-0.3085\times 0.145\ \square\ 1-0.0447 = 0.9553$$

Hence, the reliability of the given mixed system is 0.9553.

Work to do:

E7) Evaluate the reliability of the system for which the reliability block diagram is shown in Fig. 14.12, for a mission of 500 hours. Assume that all components are independent. The reliability of each component is given below for a mission of 500 hours:

$R_1 = 0.40$, $R_2 = 0.30$, $R_3 = 0.60$, $R_4 = 0.80$, $R_5 = 0.85$, $R_6 = 0.60$,

$R_7 = 0.70$, $R_8 = 0.95$, $R_9 = 0.96$.

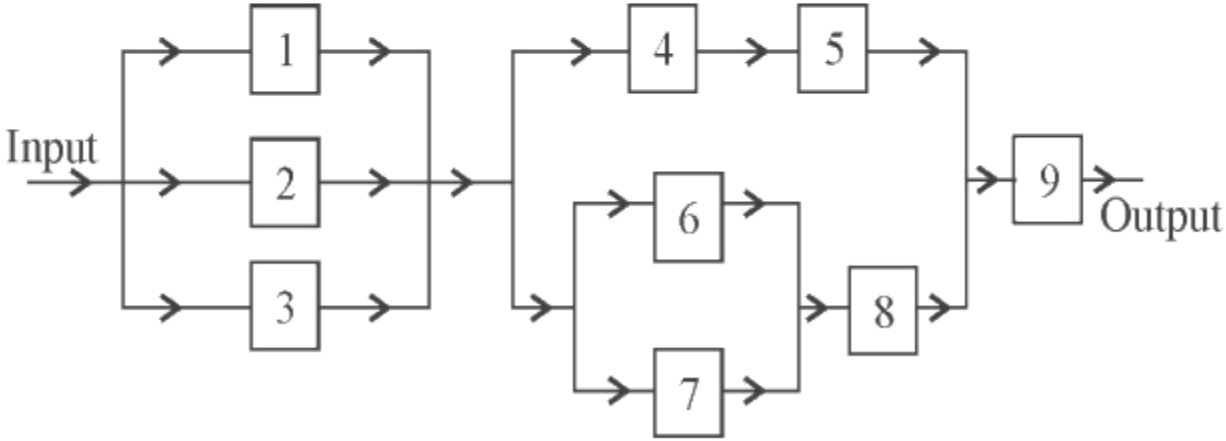

Fig. 14.12: Reliability block diagram for E7.